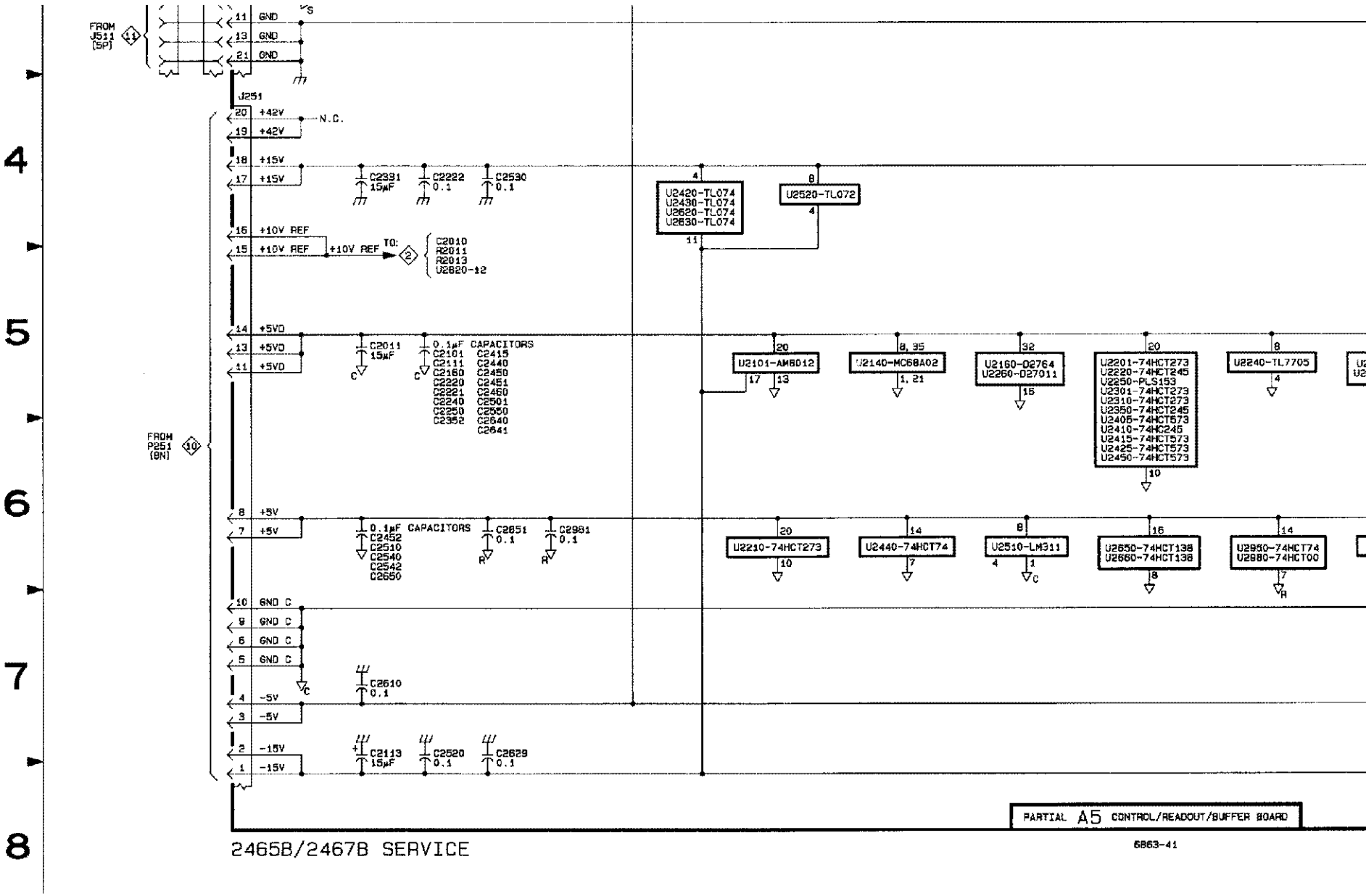
FROM J511 (5P)
11 GND
13 GND
21 GND
J251
20 +42V
N.C.
19 +42V
18 +15V
17 +15V
C2391 15µF
C2222 0.1
C2530 0.1
16 +10V REF
15 +10V REF
+10V REF
TO:
C2010
R2011
R2013
U2820-12
14 +5VD
13 +5VD
11 +5VD
C2011 15µF
0.1µF CAPACITORS
C2101 C2415
C2111 C2440
C2160 C2450
C2220 C2451
C2221 C2460
C2240 C2501
C2250 C2550
C2352 C2640
C2641
FROM P251 (8N)
8 +5V
7 +5V
0.1µF CAPACITORS
C2452
C2510
C2540
C2542
C2650
C2851 0.1
C2981 0.1
10 GND C
9 GND C
6 GND C
5 GND C
C2610 0.1
4 -5V
3 -5V
2 -15V
1 -15V
C2113 15µF
C2520 0.1
C2629 0.1
U2420-TL074
U2430-TL074
U2620-TL074
U2630-TL074
U2520-TL072
U2101-AMB012
U2140-MC68A02
U2160-D2764
U2260-D27011
U2201-74HCT273
U2220-74HCT245
U2250-PLS153
U2301-74HCT273
U2310-74HCT273
U2350-74HCT245
U2405-74HCT573
U2410-74HC245
U2415-74HCT573
U2425-74HCT573
U2450-74HCT573
U2240-TL7705
U2210-74HCT273
U2440-74HCT74
U2510-LM311
U2650-74HCT138
U2660-74HCT138
U2950-74HCT74
U2980-74HCT00
PARTIAL A5 CONTROL/READOUT/BUFFER BOARD
6863-41